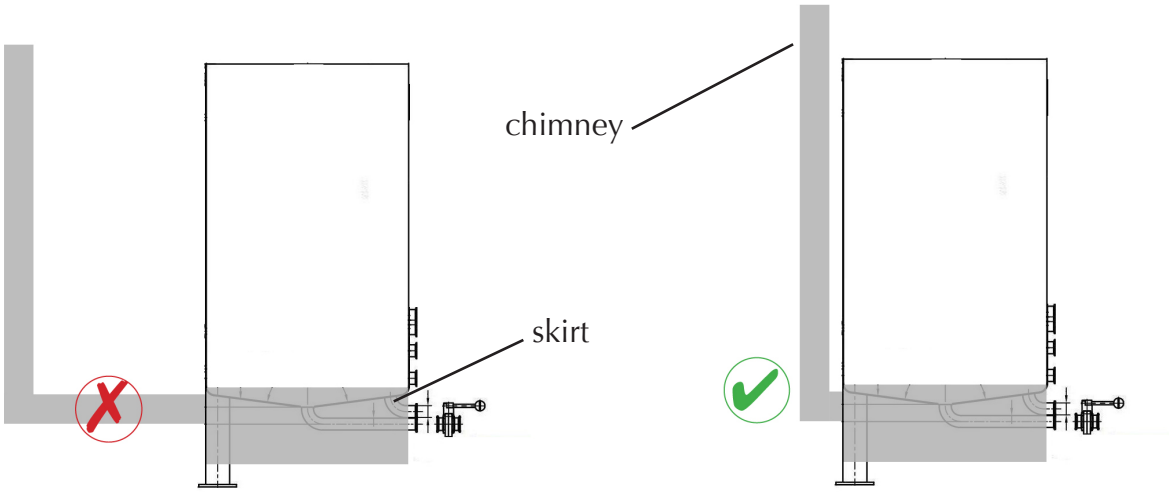

One of the most common problems that can greatly affect direct-fired tanks and kettles is improper flue design. The area under the pot is not an area that holds in heat... it is an area where heat transfer takes place. What goes in must come out. Restrictions that cause the flow of gases to slow or become minimized will cause slow heat ups, inefficient gas use, and unwanted shut-downs. If you cannot go straight up with your chimney, reduce horizontal runs as much as possible or put in 45 degree runs instead.

Burner tips should be placed 10-12 inches from the bottom of the pot.

Many skirts come with pre-cut vent holes. The pre-cut hole is the same as the size of flue pipe that should be run. NEVER reduce the size of the pipe to be smaller than the exit flue or choke down the flue pipe in a section of the flue pipe run.

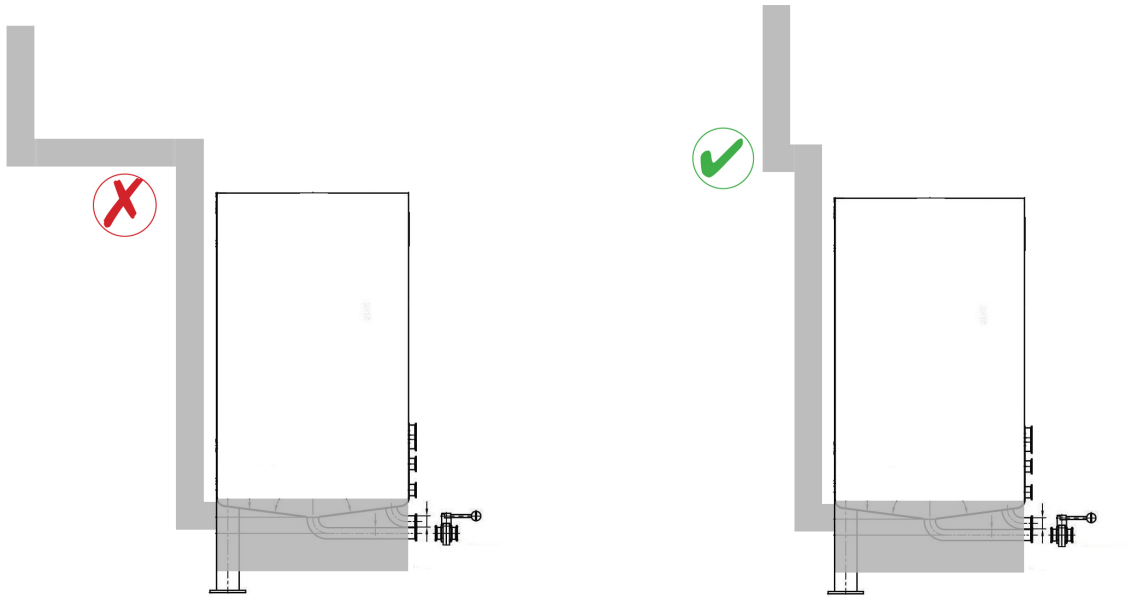

www.wardburner.com email: info@wardburner.com
PO Box 1086 • Dandridge, TN 37725 Ph. 865.397-2914

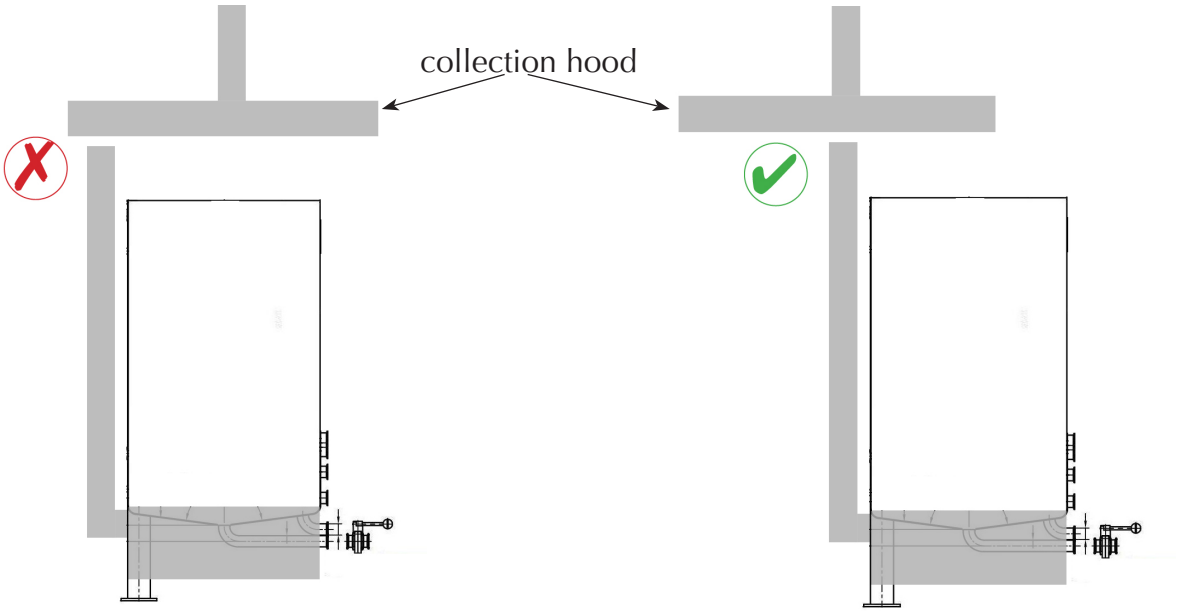

The exhaust for kettles and tanks should be centered under collection hoods if they are being used. The chimneys of hoods should follow the guidelines on these pages.

Make sure your exit flue is as high as possible

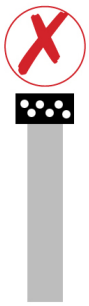

Chimney caps should not restrict the outflow of exhaust gases. Caps meant for residential wood stoves with spark arrestors are inappropriate for kettles and tanks. They are not designed to permit high flow.

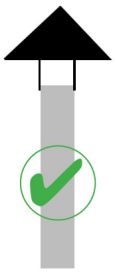

www.wardburner.com email: info@wardburner.com
PO Box 1086 • Dandridge, TN 37725 Ph. 865.397-2914

Solenoid plumbing/wiring for 24volt intermittent pilot controllers

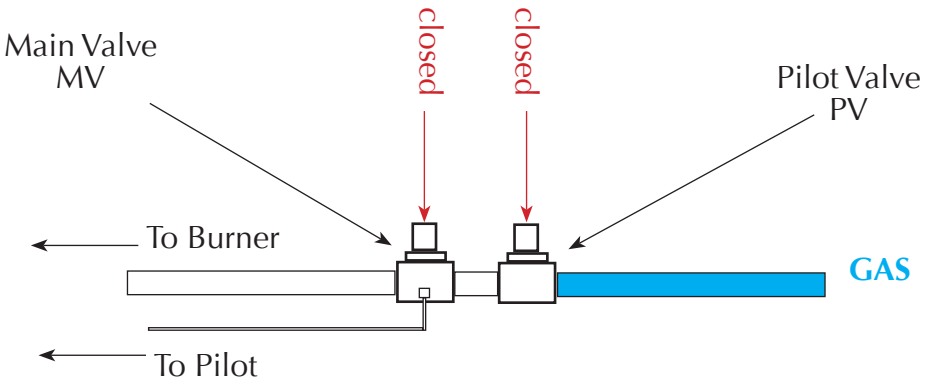

Many folks become confused by the valve names and how they are wired in the controller. This stems from the fact that the pilot gas must be taken from the main valve. Your valves are marked either MV (main valve) or PV (pilot valve). Please wire accordingly.

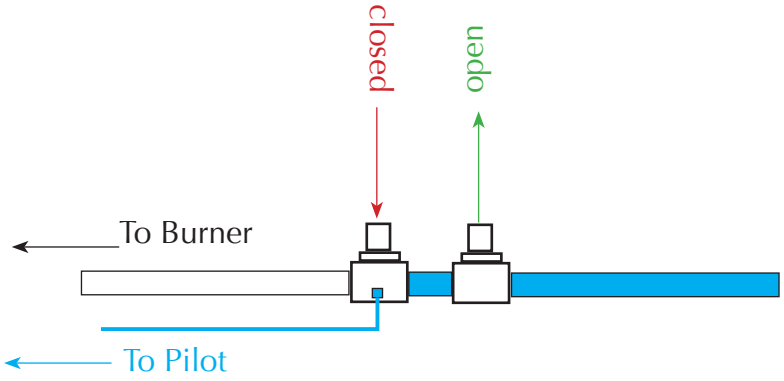

Once the pilot valve (PV) opens, gas passes through the pilot valve and into (but not through) the main valve. Gas then flows through to the pilot burner where sparking and ignition of the pilot burner takes place.

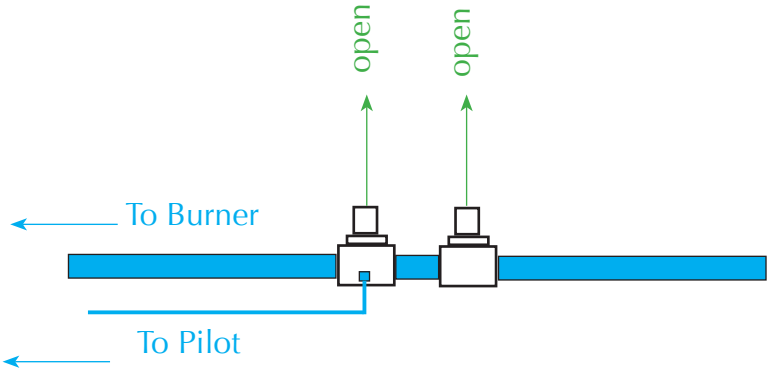

When the controller proves flame at the pilot, the main valve (MV) opens and gas flows to the main burner and ignites from the pilot burner.

Please call the number below with ANY questions

www.wardburner.com email: info@wardburner.com
PO Box 1086 • Dandridge, TN 37725 Ph. 865.397-2914

Wiring for your BG1600 Intermittent Pilot Control.

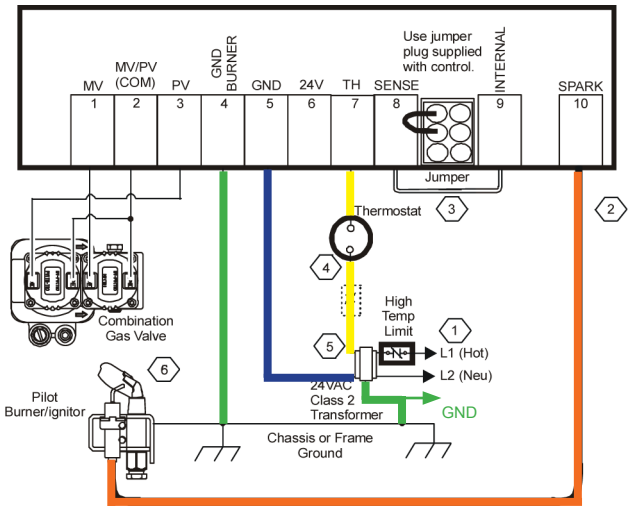

1. Power Supply. Provides disconnect means and overload protection as required.
2. Maximum cable length 48 inches (1,220 mm). (Resistive wire recommended.)
3. For single rod application, leave jumper wire in as received.
4. Alternate location for limit controller.
5. Controls in 24V circuit must not be in ground leg to transformer.
6. Sensor rod must be 3/8" (9.53 mm) to 1/2" (12.7 mm) of the sensor tip should be in the flame for proper sensing signal.

The above schematic is fig. 2 found on pg. 7 of your instruction manual that comes with your BG1600 series intermittent pilot control. This is the schematic you will use for your wiring. The most common wiring mistakes involve grounding. Note: This unit cannot be wired into a circuit that uses a GFI (Ground Fault Interrupter).

Though your schematic shows grounding going directly to the pilot, this is simply a graphical shortcut that really means grounding goes to the metal of your system. We recommend that:

1. Your ground wire coming in from your power supply should be spliced to your green wire coming out of the transformer. These then go to your gas piping outside of the skirt of your kettle where they are securely attached (grounded).

2. Run a grounding wire from terminal #4 to the same location as your other two grounding wires.

Another item that is often overlooked, though it is in your instruction manual, concerns the orange ignition wire from terminal #10 to your pilot. **Do not run this wire in metal conduit with other wires. Do not zip-tie this wire to the metal parts of your kettle. If you have to lay your orange ignition wire over the metal components of your kettle, insulate the metal with muffler tape or some other non-conductive material. This wire should not be in direct contact with any of the grounded components.**

The 24volt thermostat shown in-line and going to terminal #7 is optional. An optional 120 volt thermostat can also be used to switch your L1 leg going into the transformer.

Please call the number below with ANY questions

www.wardburner.com email: info@wardburner.com
PO Box 1086 • Dandridge, TN 37725 Ph. 865.397-2914